GN 820 | Steel Horizontal Acting Toggle Clamps

Metric Size • With Horizontal Mounting Base

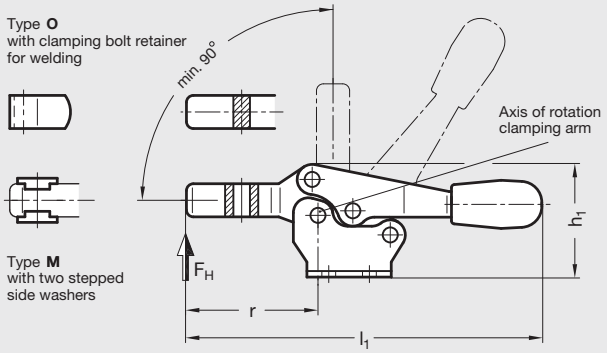

ISO 9001 Supplier

RoHS Compliant

Toggle clamp
Case-hardened sheet metal (steel C10), zinc plated, blue passivated finish
Zinc-plated steel rivets in case-hardened bushings have bearing spots greased

Hand Grip
High quality, oil resistant red plastic

Type M
U-bar version with two flanged washers

Type O
Solid bar version with clasp

Clamping screw assemblies not included, assemblies pages begin at page 838.

The hold-down bar and the handle move in the same direction. When the clamp is in the closed position the handle is horizontal. Thanks to the shape of the tool, a safe distance between the handle and the clamping bar is provided to prevent the operator's fingers from being pinched while opening the instrument.
For stainless steel version see GN 820-NI, page 840.

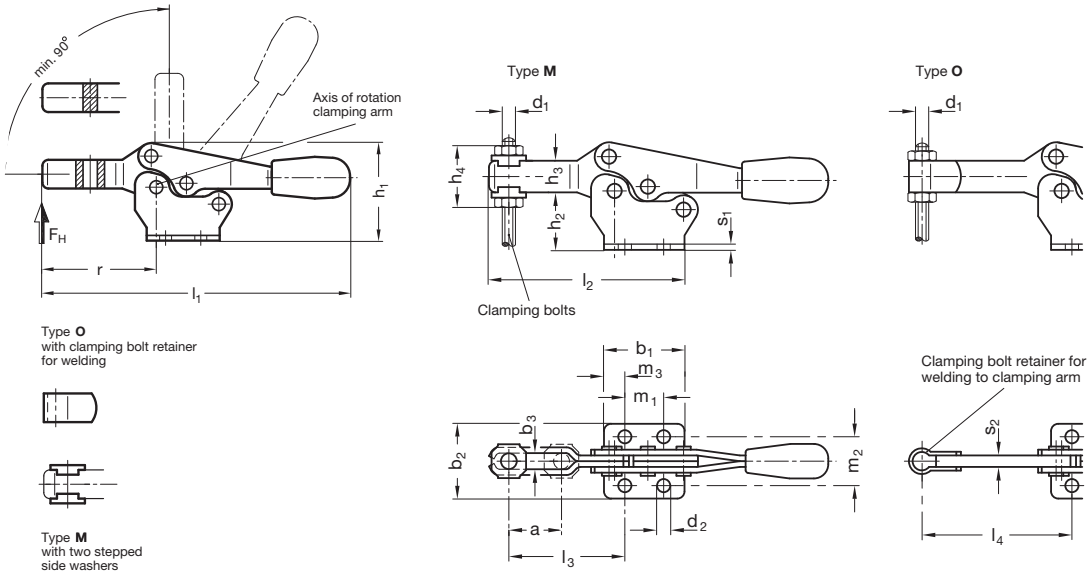

Metric Table

Dimensions in: millimeters *(inches)*

Part Number		Size Ref.	Holding Capacity FH[N]	a~	b_1	b_2	b_3	d_1 Thread	d_2	h_1	h_2	h_3
Type M U Bar	Type O Solid Bar											
25EVT7/M	–	25	400	10 *(.39)*	24 *(.94)*	24.5 *(.96)*	4.5 *(.18)*	M4 x .7	4.3 *(.17)*	22 *(.91)*	12 *(.47)*	7 *(.28)*
75EVT7/M	75EVT7/O	75	900	20 *(.79)*	28 *(1.10)*	26 *(1.02)*	5.5 *(.22)*	M5 x .8	4.5 *(.18)*	38 *(1.50)*	20 *(.79)*	11 *(.43)*
130EVT7/M	130EVT7/O	130	1000	32 *(1.26)*	36 *(1.42)*	40 *(1.57)*	6.5 *(.26)*	M6 x 1.0	5.5 *(.22)*	51 *(2.00)*	29 *(1.14)*	14 *(.55)*
230EVT7/M	230EVT7/O	230	1700	37 *(1.46)*	44 *(1.73)*	42 *(1.65)*	8.5 *(.33)*	M8 x 1.25	6.5 *(.26)*	61.5 *(2.42)*	36 *(1.42)*	18 *(.71)*
355EVT7/M	355EVT7/O	355	3200	58 *(2.28)*	60 *(2.40)*	56 *(2.20)*	10.5 *(.41)*	M10 x 1.5	8.5 *(.33)*	83 *(3.27)*	50 *(1.97)*	22 *(.87)*
455EVT7/M	455EVT7/O	455	6200	65 *(2.56)*	70 *(2.76)*	65 *(2.56)*	13 *(.51)*	M12 x 1.75	8.5 *(.33)*	98 *(3.86)*	60 *(2.40)*	26 *(1.02)*

Size Ref.	h_4	l_1	l_2	l_3	l_4 max.	m_1	m_2	m_3	r	s_1	s_2
25	15 *(.59)*	69 *(2.72)*	43 *(1.69)*	20 *(.79)*	–	15 *(.59)*	16 *(.63)*	4.5 *(.18)*	24.5 *(.96)*	1.2 *(.05)*	–
75	22.5 *(.89)*	118 *(4.65)*	67 *(2.64)*	40 *(1.57)*	49.5 *(1.95)*	13.5 *(.53)*	17 *(.67)*	7.2 *(.31)*	43 *(1.69)*	2 *(.08)*	4 *(.16)*
130	27 *(1.06)*	168 *(6.61)*	92 *(3.62)*	53 *(2.09)*	64 *(2.52)*	26 *(1.02)*	26 *(1.02)*	5 *(.20)*	62 *(2.44)*	2.5 *(.10)*	5 *(.20)*
230	35 *(1.38)*	196 *(7.71)*	109 *(4.30)*	63.5 *(2.50)*	78 *(3.07)*	26 *(1.02)*	28.5 *(1.12)*	9 *(.35)*	72 *(2.83)*	3 *(.12)*	6 *(.24)*
355	43 *(1.69)*	270 *(10.63)*	160 *(6.30)*	96 *(3.78)*	115 *(4.53)*	41 *(1.61)*	41 *(1.61)*	9.5 *(.37)*	108.5 *(4.27)*	3.5 *(.14)*	7 *(.28)*
455	53 *(2.09)*	308 *(12.13)*	184 *(7.24)*	116 *(4.57)*	135 *(5.31)*	41.5 *(1.63)*	41.5 *(1.63)*	14.2 *(.56)*	126 *(4.96)*	4 *(.16)*	10 *(.39)*