SPECIFICATIONS

Model	Max. Power		Speed at Max. Power	Free Speed▲	Starting Torque		Stall Torque		Air Consumption at Max. Power		Weight	
	hp	kw	rpm	rpm	lb.-ft.	Nm	lb.-ft.	Nm	scfm	m³/m	lb.	kg
Direct Drive Reversible												
CCM	2.05	1.53	1075	2140	13.2	17.9	18.8	25.5	97	2.7	135	61.2
DD6M	2.6	1.94	750	1490	24	32.5	34.2	46.4	79	2.2	135	61.2
EEM	4.4	3.28	735	1450	41	55.6	59	80	137	3.9	200	90.7
EE5M	7.8	5.82	950	1875	60	81.4	80.5	109.2	220	6.2	210	95.3
HHM	11.3	8.43	730	1450	106	144	152	206	270	7.6	235	107
HH5M	15.2	11.33	750	1500	146	198	195	264	400	11.3	250	113
KK6M	25	18.64	755	1500	260	353	325	441	680	19.3	475	216
Geared Drive Reversible												
EE3G	5	3.73	275	560	122	165	175	237	155	4.4	200	90.7
EE53G	6.8	5.07	305	600	154	209	205	278	220	6.2	220	99.8
EE9G	4.7	3.51	92	190	357	484	510	692	155	4.4	210	95.3
EE59G	6.5	4.85	100	200	450	610	600	814	220	6.2	230	104

▲ ALL models must be operated with sufficient load to prevent speed from exceeding maximum allowable speed shown on performance curve.
All of the above motors are furnished less valve and piping as standard.
Performance figures are at 90 psig (620 kPa) air pressure.

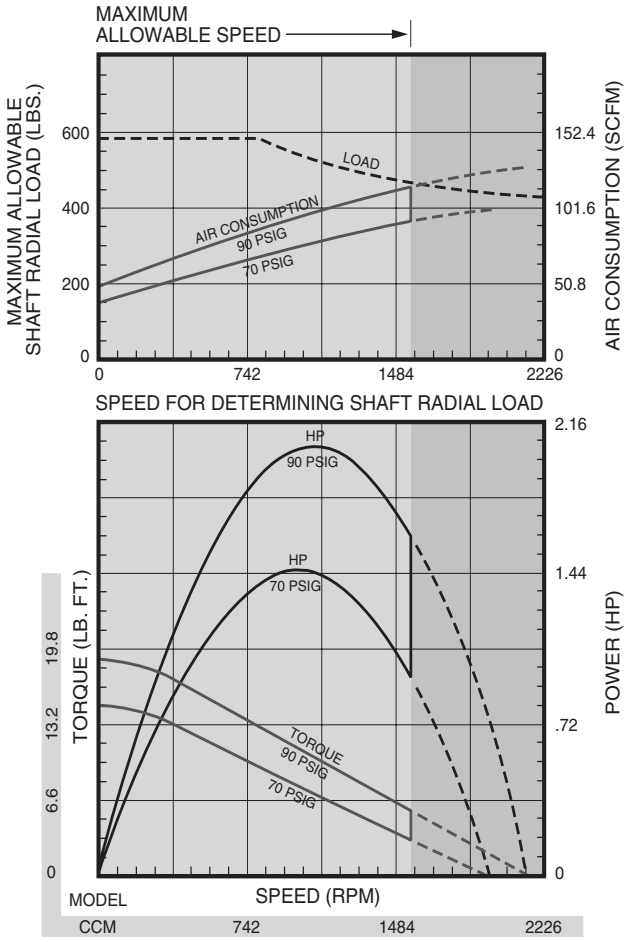

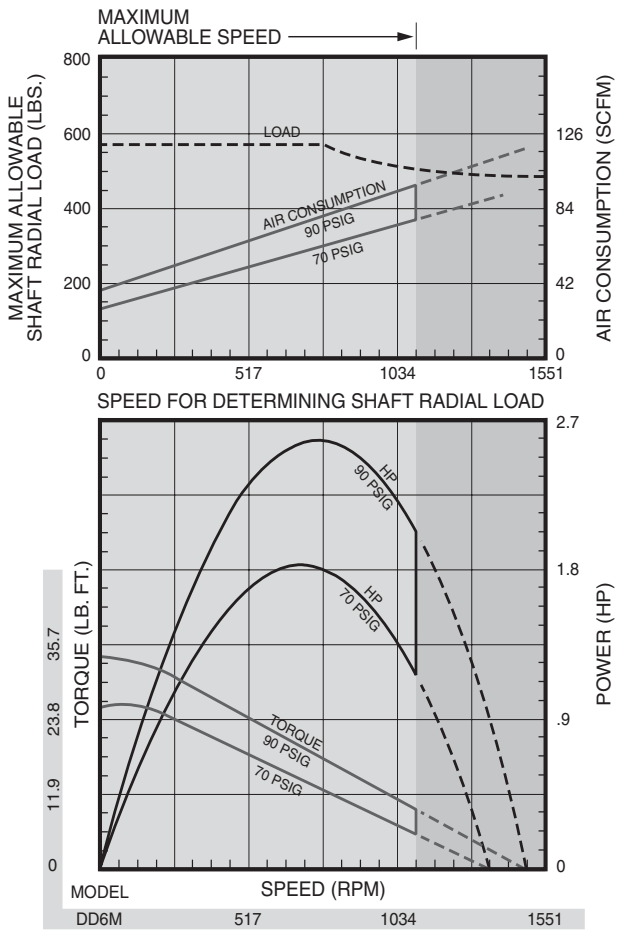

Direct and Geared Drive Piston Air Motors

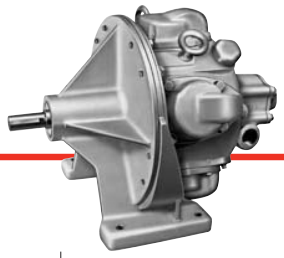

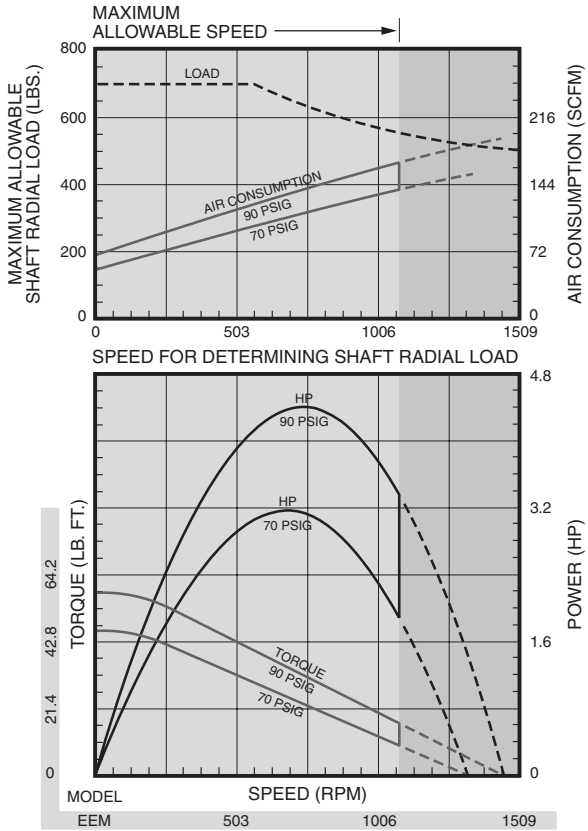

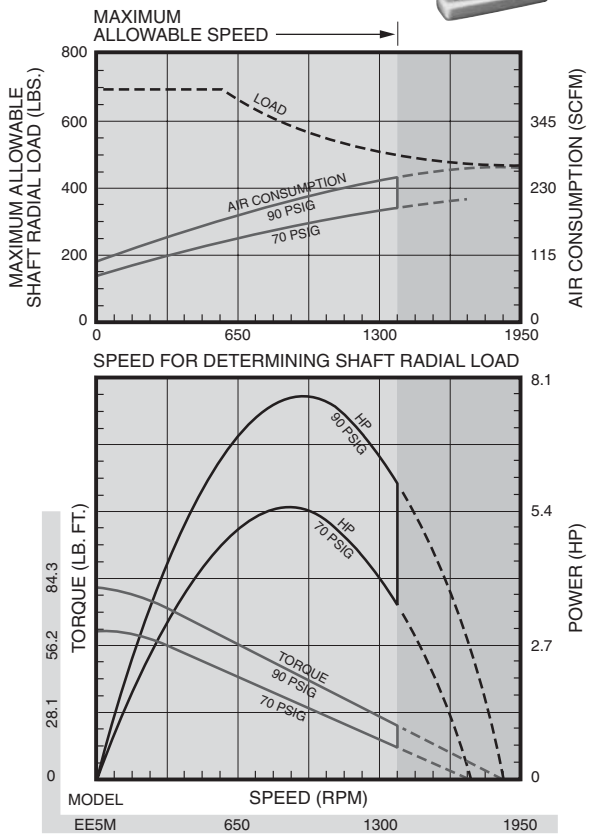

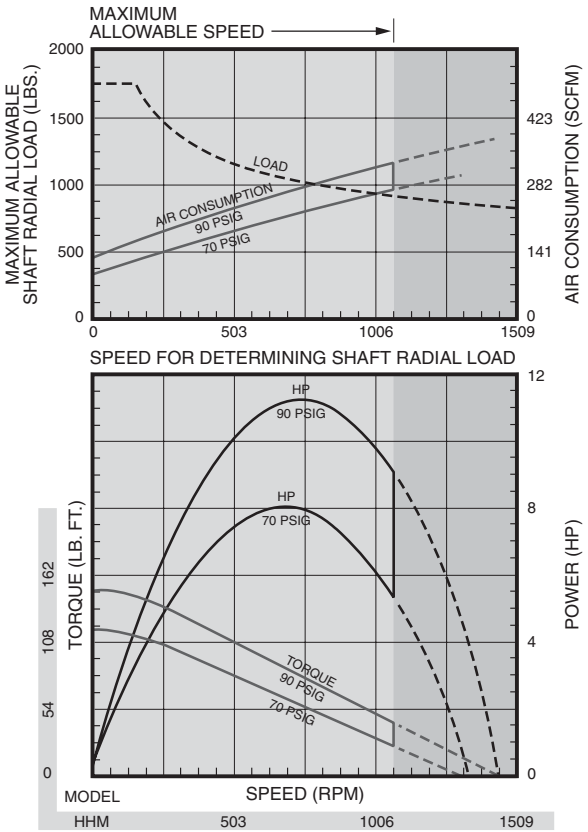

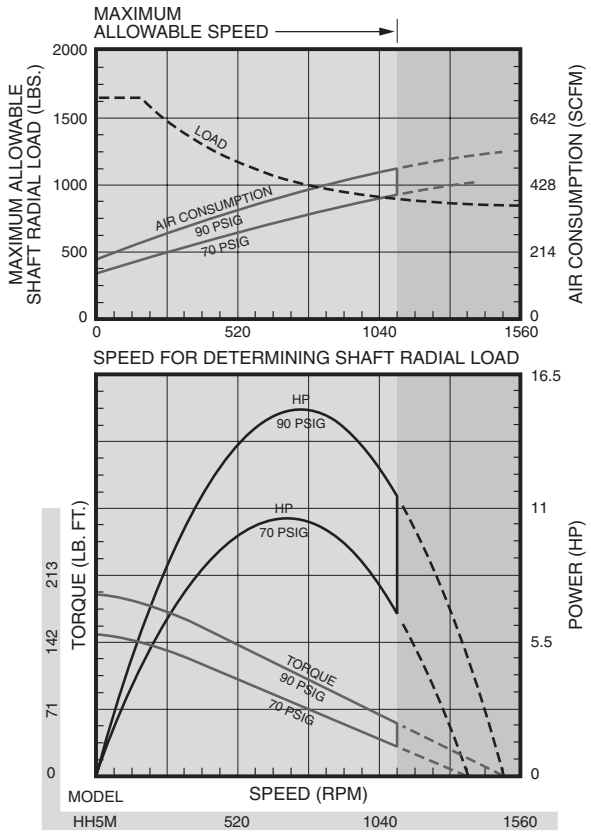
MAXIMUM
ALLOWABLE SPEED
MAXIMUM ALLOWABLE SHAFT RADIAL LOAD (LBS.)
2000
1500
1000
500
0
LOAD
AIR CONSUMPTION
90 PSIG
70 PSIG
642
428
214
0
AIR CONSUMPTION (SCFM)
0
520
1040
1560
SPEED FOR DETERMINING SHAFT RADIAL LOAD
HP
90 PSIG
HP
70 PSIG
TORQUE (LB. FT.)
213
142
71
0
TORQUE
90 PSIG
70 PSIG
16.5
11
5.5
0
POWER (HP)
MODEL
SPEED (RPM)
HH5M
520
1040
1560

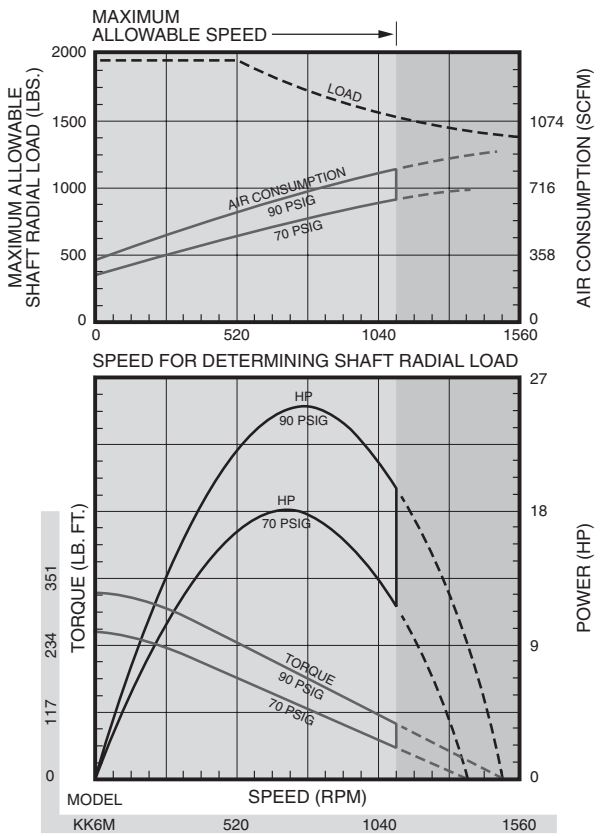
MAXIMUM
ALLOWABLE SPEED
MAXIMUM ALLOWABLE SHAFT RADIAL LOAD (LBS.)
2000
1500
1000
500
0
LOAD
AIR CONSUMPTION
90 PSIG
70 PSIG
1074
716
358
0
AIR CONSUMPTION (SCFM)
0
520
1040
1560
SPEED FOR DETERMINING SHAFT RADIAL LOAD
HP
90 PSIG
HP
70 PSIG
TORQUE (LB. FT.)
351
234
117
0
TORQUE
90 PSIG
70 PSIG
27
18
9
0
POWER (HP)
MODEL
SPEED (RPM)
KK6M
520
1040
1560

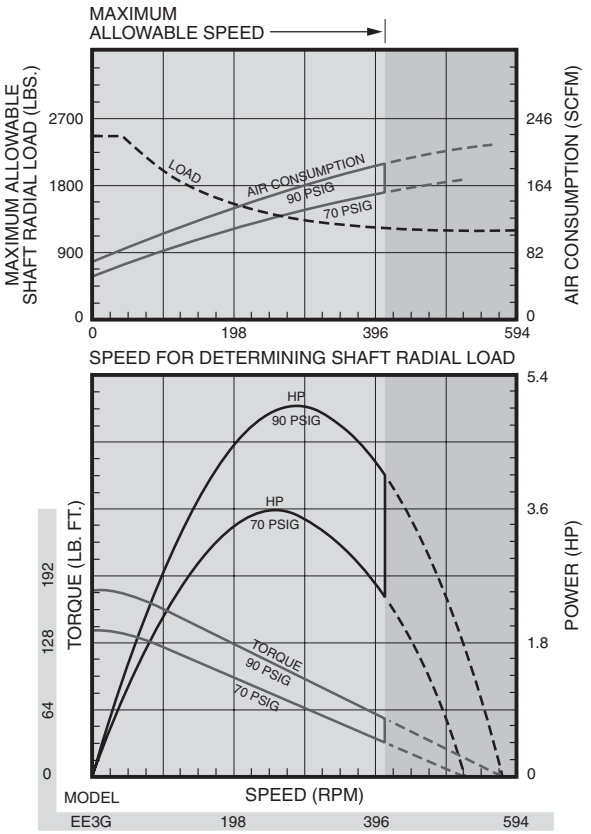
MAXIMUM
ALLOWABLE SPEED
MAXIMUM ALLOWABLE SHAFT RADIAL LOAD (LBS.)
2700
1800
900
0
LOAD
AIR CONSUMPTION
90 PSIG
70 PSIG
246
164
82
0
AIR CONSUMPTION (SCFM)
0
198
396
594
SPEED FOR DETERMINING SHAFT RADIAL LOAD
HP
90 PSIG
HP
70 PSIG
TORQUE (LB. FT.)
192
128
64
0
TORQUE
90 PSIG
70 PSIG
5.4
3.6
1.8
0
POWER (HP)
MODEL
SPEED (RPM)
EE3G
198
396
594

Direct and Geared Drive Piston Air Motors

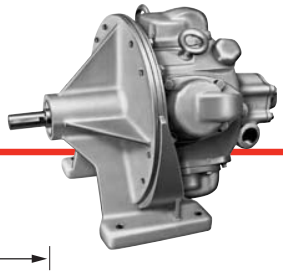

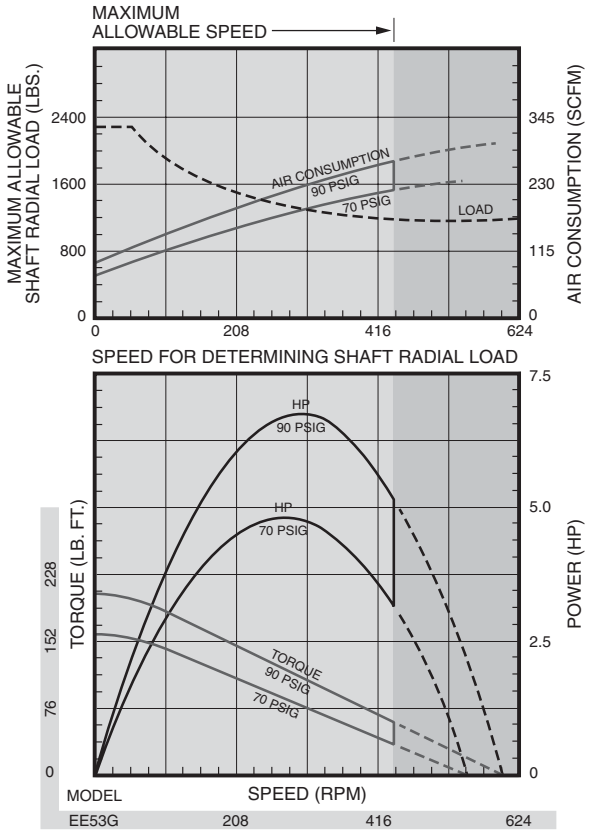

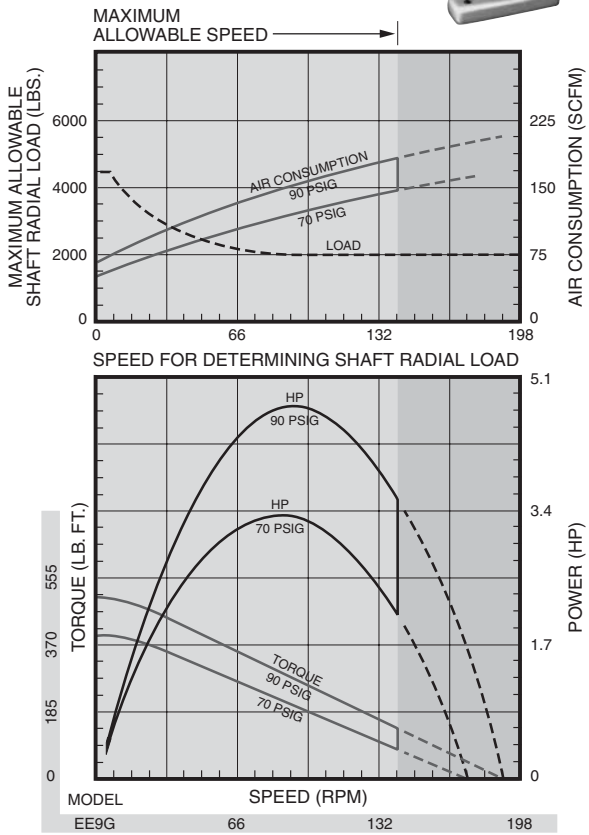

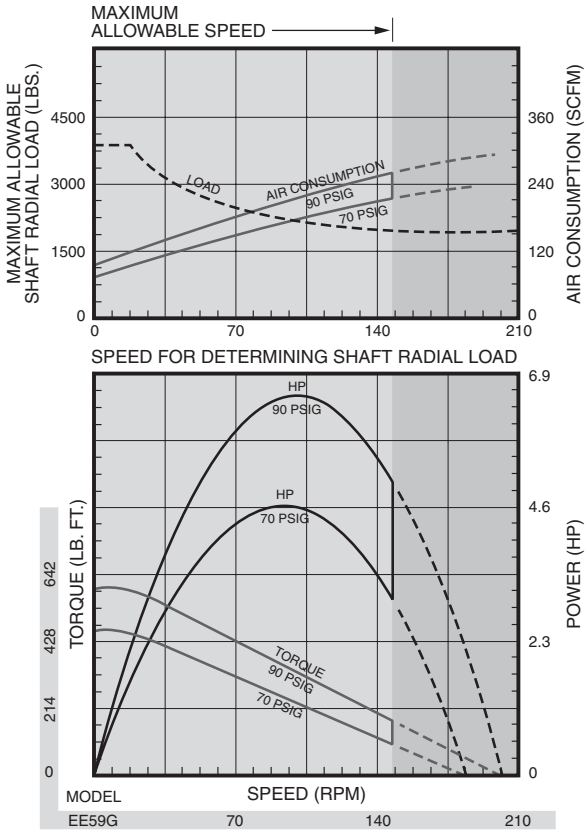

DIRECT DRIVE DIMENSIONS

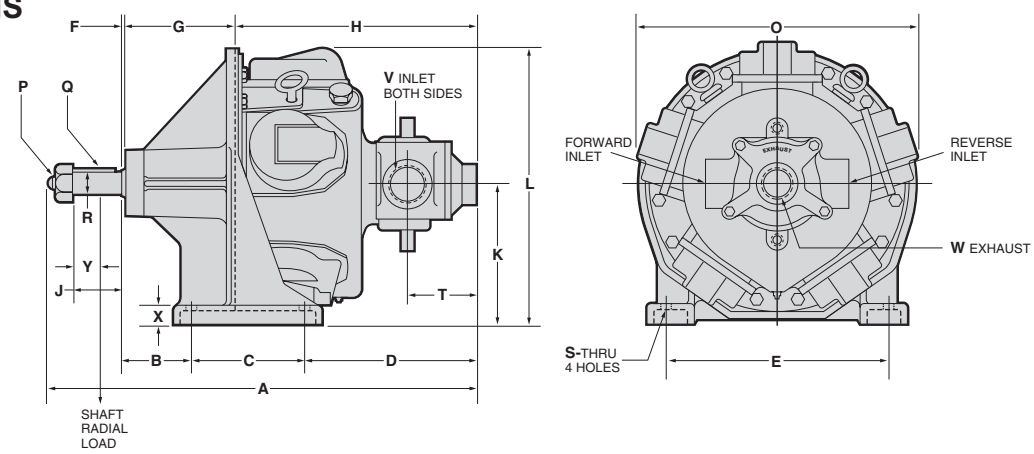

DIMENSIONS IN INCHES

Model	A	B	C	D	E	F	G	H	J	K	L	O	P** Thd.	Q Key	R*	S Dia.	T	V NPT	W NPT	X	Y
CCM, DD6M	23 9/16	3 3/4	7 3/4	7 7/8	10 1/2	25/32	7 13/32	11 3/16	3	8 3/4	15 5/8	13 3/4	1"-8	1/4 x 1/4	1.125	25/32	2 11/16	3/4	1	7/8	2 11/16
EEM, EE5M	27	3 13/16	9 3/4	9 9/32	12 1/2	25/32	9 17/32	12 17/32	3	9 5/16	16 13/16	15	1"-8	1/4 x 1/4	1.125	25/32	2 15/16	1	1	7/8	2 11/16
HHM	24 3/16	4 5/16	7	9 7/8	13 1/2	3/16	7	14	3	8 7/8	17 1/4	17 1/4	+	3/8 x 3/8	1.375	21/32	3 13/16	1	1 1/4	1 1/4	1 5/16
HH5M	24 3/16	4 5/16	7	9 7/8	13 1/2	3/16	7	14	3	8 7/8	17 1/4	17 1/4	+	3/8 x 3/8	1.375	21/32	3 13/16	1	1 1/4	1 1/4	1 5/16
KK6M	30 1/4	4 3/4	8 5/8	12 5/8	13 1/2	1/8	7 11/16	18 3/16	4 1/4	12 1/8	22 1/4	22	+	3/8 x 3/8	1.625	21/32	4 5/16	1 1/4	1 1/2	1 3/8	1 7/8

+ The end of the shaft is not threaded on these Motors and no nut is used. *Tolerance: +0 -.0005" **Thd.–UNC2A.

DIMENSIONS IN MILLIMETERS

Model	A	B	C	D	E	F	G	H	J	K	L	O	P Thd.	Q Key	R*	S Dia.	T	X	Y
CCM, DD6M	599	95	197	200	267	20	188	284	76	222	397	349	1"-8	6 x 6	28	20	68	22	68
EEM, EE5M	686	97	248	236	318	20	242	318	76	237	427	381	1"-8	6 x 6	28	20	75	22	68
HHM	614	110	178	251	343	5	178	356	76	225	438	438	+	10 x 10	35	17	97	32	33
HH5M	614	110	178	251	343	5	178	356	76	225	438	438	+	10 x 10	35	17	97	32	33
KK6M	768	121	219	321	343	3	195	462	108	308	565	559	+	10 x 10	41	17	110	35	48

+ The end of the shaft is not threaded on these Motors and no nut is used. *Tolerance: +0 -0.13mm

GEARED DRIVE DIMENSIONS

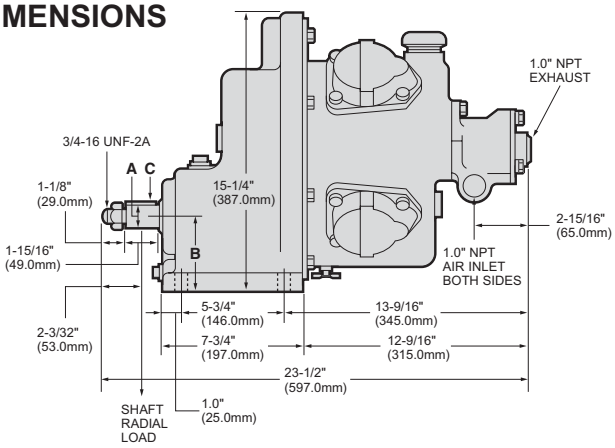

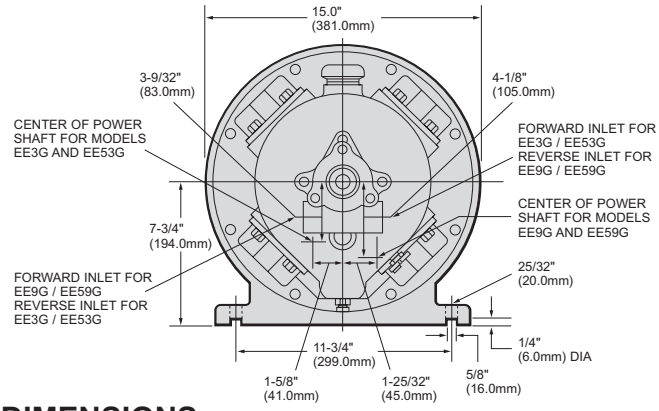

DIMENSIONS

MODELS	A*		B		KEY C	
	in.	mm	in.	mm	in.	mm
EE3G, EE53G	1.251	31.78	4 15/32	114	1/4 x 1/4 x 1 25/32	6 x 6 x 45
EE9G, EE59G	1.501	38.13	3 5/8	92	3/8 x 3/8 x 1 11/16	10 x 10 x 43

*Tolerance: +0 -.0005" (0.13mm)

GRUPO PEGAMO DESDE 1982

SUMINISTRO INDUSTRIAL

En Pegamo Suministro Industrial llevamos desde 1982 vendiendo, alquilando y reparando Herramienta Hidráulica, Herramienta Neumática y Herramienta Manual de las principales marcas del mercado.

Te asesoramos para que encuentres la mejor solución a las necesidades de tu empresa.

CONTACTA CON NOSOTROS

Pol. Lintzirin Gaina, B2
20180 Oiartzun.
Gipuzkoa - Spain

suministros@pegamo.es
T. 943 491 788
F. 943 371 001